BS-W-12

- 塑料外壳
- 金属螺丝
- 连接紧固件
- 高防护等级
- 线缆出线4 x 90 ° 可旋转

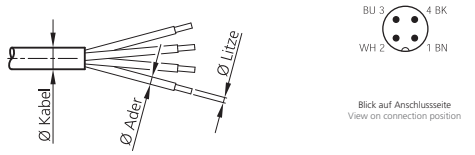

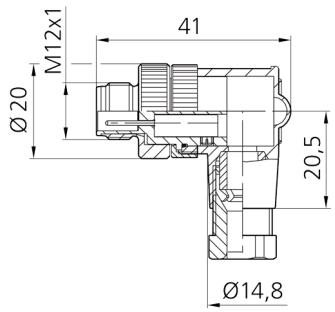

Safety instructions

The Instruments are not to be used for safety applications, in particular applications in which safety of persons depends on proper operation of the instruments.
These instruments shall exclusively be used by qualified personnel.

TECHNICAL INFORMATION (typ.)	+20°C, 24V DC
设计	带角度的
防护等级	IP 67
外壳材料	plastics
Connection sensor side	Field-wireable, Connecting clamps, 4-poled
Connection control side	Connector, M12x1, 4-poled
用于线缆直径	4,0 ... 6,0 mm
辫状	0,75 mm