BE-CS-G0
LED Board Replacement Kit, IR

- For the assembly at CS 50

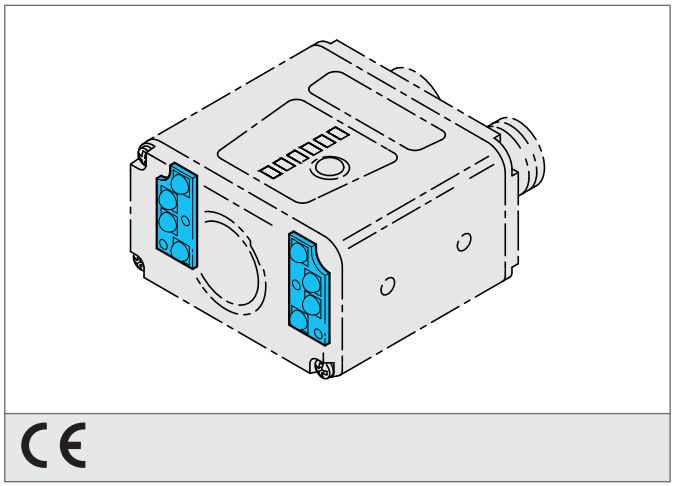

Safety instructions

The Instruments are not to be used for safety applications, in particular applications in which safety of persons depends on proper operation of the instruments.
These instruments shall exclusively be used by qualified personnel.

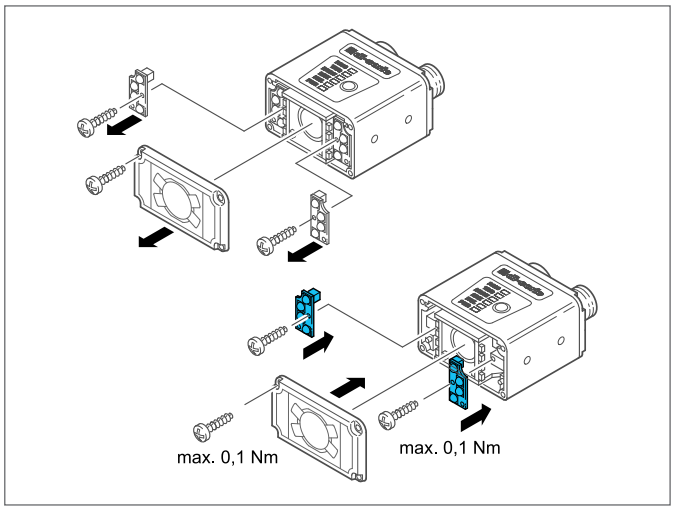

TECHNICAL INFORMATION (typ.)	+20°C, 24V DC
Barva sv tla	Infračervené sv tlo, 850 nm
Vhodné pro	CS 50
Tightening torque	max. 0,1 Nm